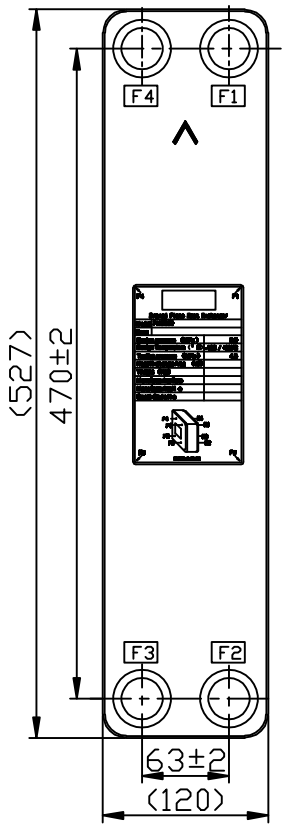

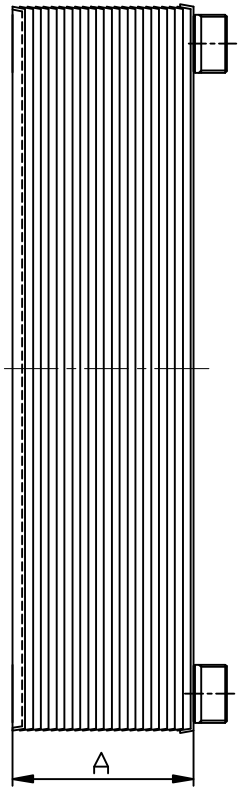

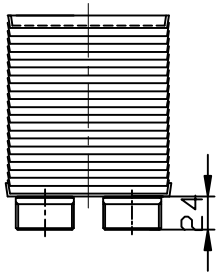

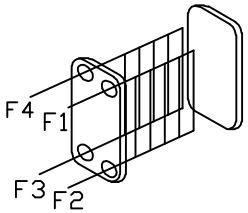

G1″1/4 Connection(L017C)

Scale:4:1

F1 F2

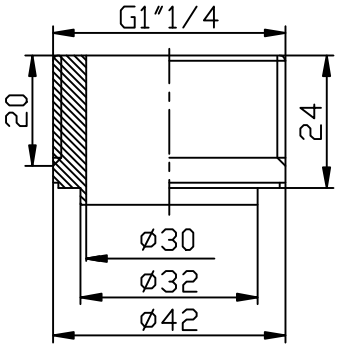

G1″1/4 Connection(L017D)

Scale:4:1

F3 F4

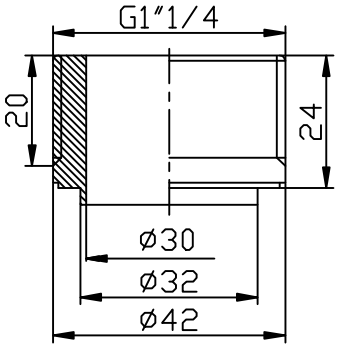

Drawings confirmation symbol
Fax:
Recipient:
Signature :
Passback : 0573-87965587
Sender:
Date:

Design pressure(MPa)	3.0
Test pressure(MPa)	4.5
Design temperature(℃)	-196～+200℃
Volume (L)	F1F2(side)3.88/F3F4(side)3.77
Heat exchange surface(㎡)	4.08
Weight(kg)	16.1
Material of plates	316L
Customer's item number	

Mark	Number of place	Subsection	Modification file number	Signature	Date

Stainless Steel -Cu-Braze Welding Plate Heat Exchanger

Designer	JunZhou	20121130	Standardization		
Collator					
Reviewer			Edition	A/0	
Technics			Approver		

Section symbol | Weihgt: 0.5+0.05N | Scale: 1:1

FHT5070-003

No.	Model	Spec	A
1	FHC060-70-3.0-H	F1F2F3F4(G1″1/4)	170±3